IF IN DOUBT ASK

UOS ALL DIMS IN MILLIMETRES

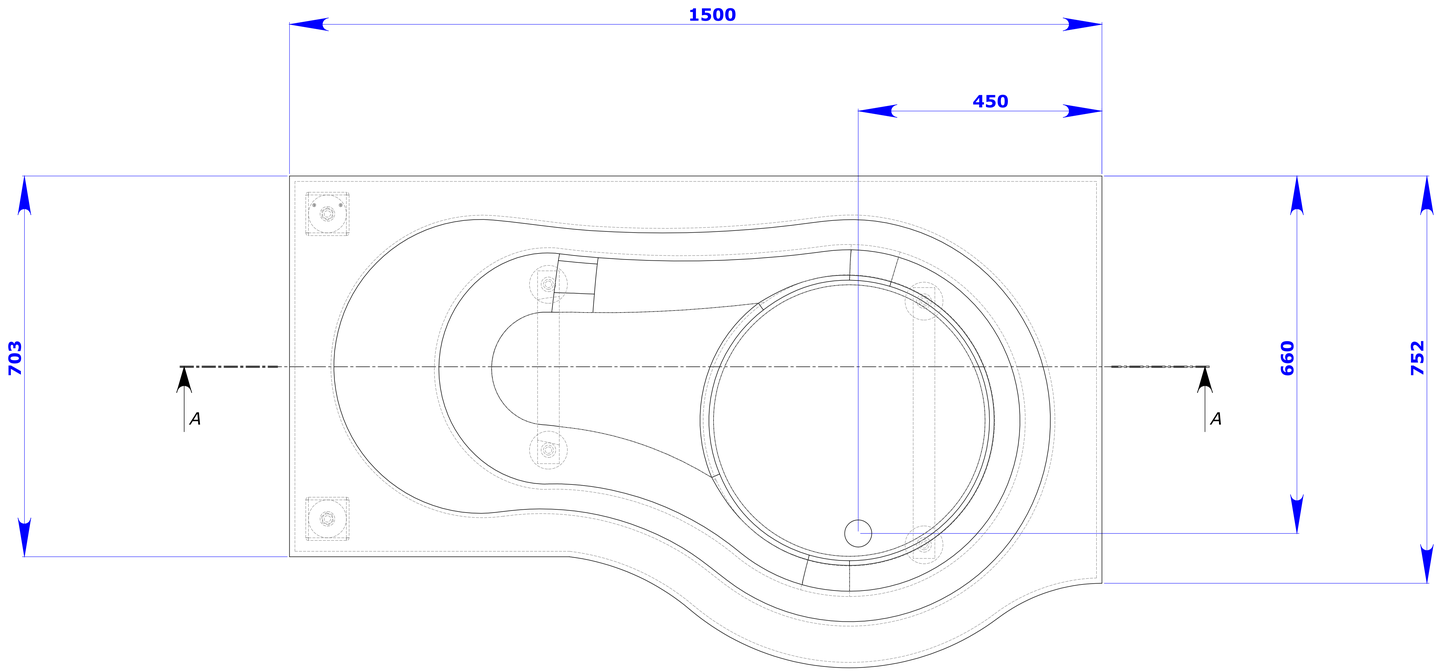

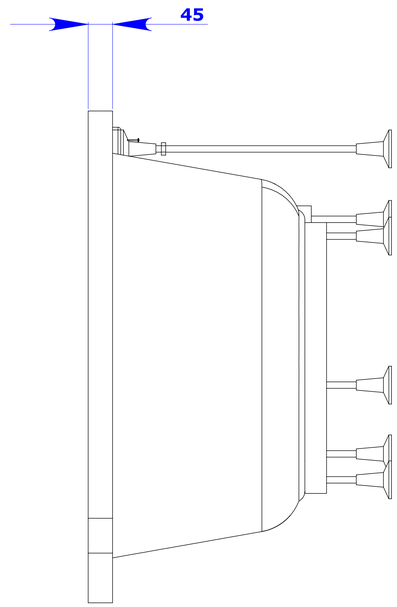

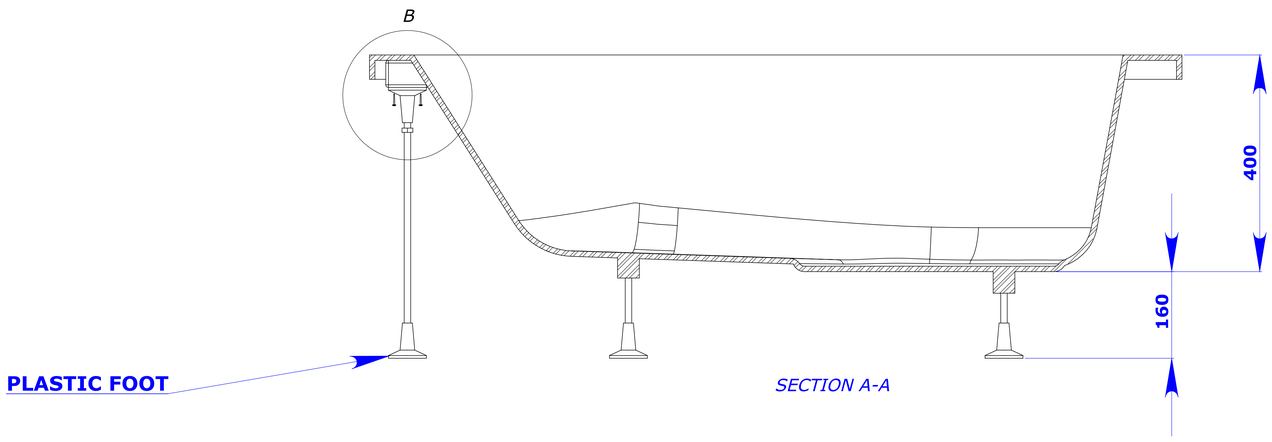

SECTION A-A

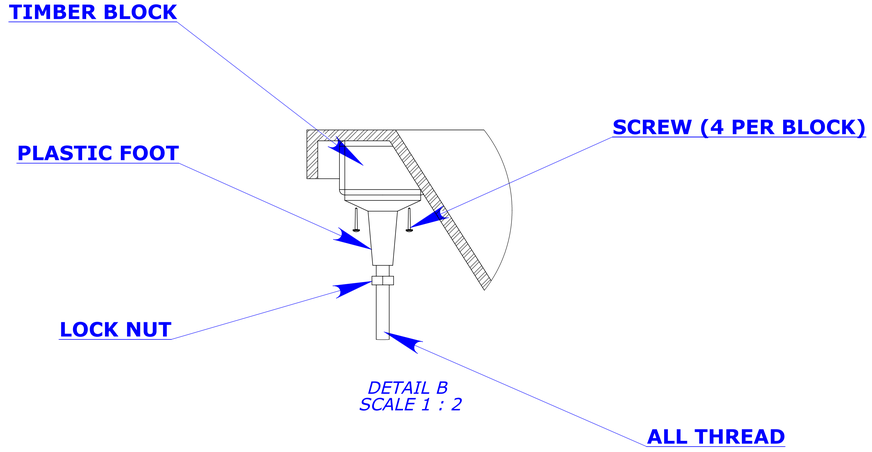

DETAIL B
SCALE 1 : 2

PRELIMINARY ISSUE - NOT FOR MANUFACTURE

APPROVED FOR	SIGNED	DATE
QUOTATION		
MATL ORDER		
MANUFACTURE		
REWORK		

REV.	DESCRIPTION	DATE	APPROVED
REVISION TABLE			

#		NOTES
1		
2		
3		
4		
5	MATERIAL	Material <not specified>
6	QTY	
7	TOT QTY	
8	FINISH	
9	VENDOR	
10	FILE NAME	V774-14 JORDAN 1500 RH
11	WELDING	UOS ALL FABRICATIONS TO BE FULLY WELDED WITH CORRECT PREPARATION OF WELD SURFACES INCLUDING BEVELLED EDGES ETC

PROJECT

Lanark BATHROOMWARE SPAS & HOT TUBS

VICTORIA - HEAD OFFICE
Ph: (03) 9768 3577
Fax: (03) 9768 3636
Email: vicinfo@lanark.com.au

Design by View7

ALL INFORMATION CONTAINED ON THIS AND ATTACHED DRAWINGS REMAINS THE SOLE PROPERTY OF LANARK. AND MAY NOT BE COPIED IN ANY WAY WITHOUT PERMISSION.

3RD ANGLE

DEBUR AND BREAK SHARP EDGES

GENERAL TOLERANCE: +/- 0.5mm

0.5mm U.O.S.

	SIGNATURE	DATE
DRAWN	View7	13/06/2008
CHK'D		
APPV'D		
WEIGHT:		

DESIGN REV 1.0

V7 PROJECT # V70774

DWG ISSUE A

CLIENT

CUSTOMER

TITLE:

JORDAN 1500 RH

DWG NO. V774-14 A0

SHEET SCALE:1:4 SHEET 1 OF 1